STANDARD
MODEL NO. MHC-D3-1500

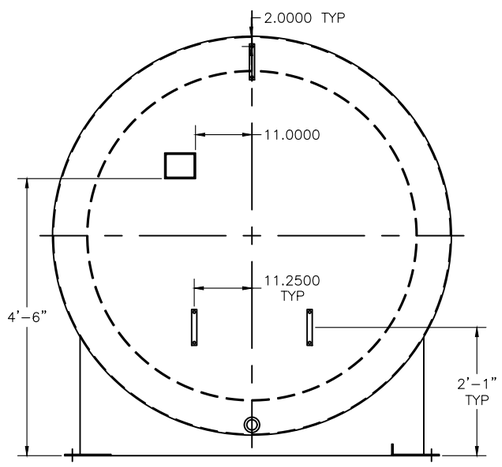

LEFT END VIEW

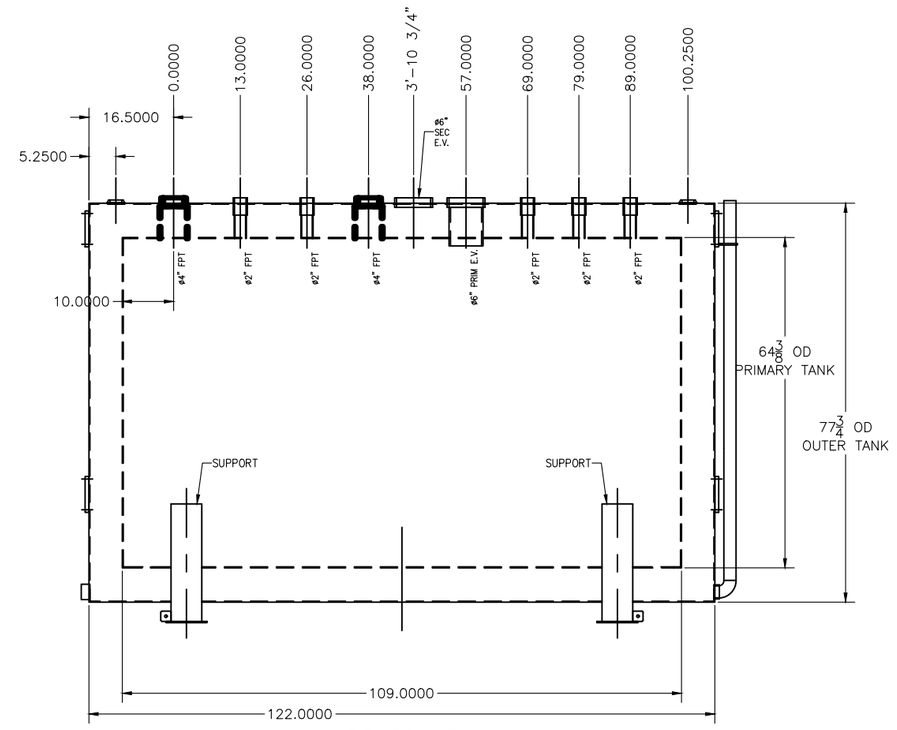

ELEVATION VIEW

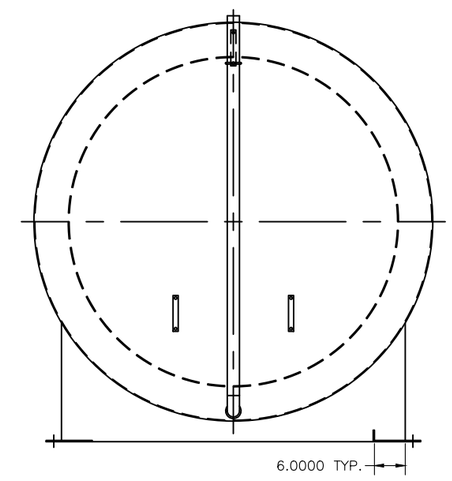

RIGHT END VIEW

Ø2" FPT.	Ø2 7/16"	Ø2 7/8"
Ø2" TANK FLNG.	-	Ø2 3/4"
Ø4" FPT.	Ø5 5/8"	Ø5 3/16"
Ø6" PRIM. E.V.	Ø6 11/16"	Ø7 1/2"
Ø6" SEC. E.V.	-	Ø7 1/2"
CONNECTION DATA	PRIMARY TANK	SECONDARY TANK

FITTING SCHEDULE

DESIGN: FABRICATED PER UL-142 & 2085, SWRi (SOUTHWEST RESEARCH)
INSPECTION: MODERN WELDING COMPANY
MATERIAL: MILD CARBON STEEL (UNLESS NOTED)
(INTERNAL): SURFACE PREP - N/A
COATING - N/A
(EXTERNAL): SURFACE PREP - SSPC-SP6 (COM. BLAST)
COATING - PRIMER & PAINTED FINISH
OPERATING PRESSURE: ATMOSPHERIC
PRESSURE TEST: 3-5 PSI AIR W/ SOAP TEST

INTERSTITIAL: PERLITE CONCRETE MATERIAL BETWEEN PRIMARY & SECONDARY

GENERAL NOTES

THIS DRAWING IS FOR ILLUSTRATION PURPOSES ONLY AND IS NO TO BE RELIED UPON FOR ANY OTHER PURPOSE. NO WARRANTY OF MERCHANTABILITY, OF FITNESS FOR A PARTICULAR PURPOSE OR OF ANY OTHER KIND, EXPRESSED OF IMPLIED, IS HEREBY MADE.

MODERN WELDING COMPANY, INC.

"SUPERVAULT" MH-PROTECTED AST
MHC-D3-1,500

TANK NOM. CAPACITY: 1,500 GALLONS

DWN. BY:	SCALE: NONE	DATE:	DWG NUMBER
APR. BY:	JOB NO.:JOB	SHEET: 1 of 1	